Res. Bull. Pl. Prot. Japan No. 53：75～81（2017）

Short Communication

Ramorum Blight of *Rhododendron* sp. Caused by *Phytophthora ramorum* Intercepted in Plant Quarantine Inspection in Japan

Takuya Sakoda, Hiroko Goto, Tomoshige Kanno[1)], Toko Hiyama[2)], Takashi Hirakawa[2)],Yoshinari Nakanishi[2)] and Takashi Hirata[2)]

Research Division, Yokohama Plant Protection Station,
1-16-10, Shin-yamashita, Naka-ku, Yokohama, 231-0801 Japan.

Abstract: A new disease of *Rhododendron* sp. (cv. Loch Lomond) causing leaf blight was intercepted in a plant quarantine inspection at Tokyo International Post Office in Japan. The isolated fungus was pathogenic to the original host, and identified as *Phytophthora ramorum* Werres De Cock & Man in't Veld, based on the morphology and the phylogenetic analysis of the rDNA-ITS region.

Key words: *Phytophthora ramorum*, Rhododendron, ramorum blight, plant quarantine

The genus *Rhododendron* (Ericaceae) is mainly distributed in temperate areas of the northern hemisphere, and includes the shrubs commonly called azaleas and rhododendrons, which are important horticultural crops (Farr *et al*., 1996; Roane, M.K., 2014). In February 2015, discolored leaves were found on *Rhododendron* sp. cultivar 'Loch Lomond' (Rhododendrons) imported from Scotland, the United Kingdom (UK), in a plant quarantine inspection at Tokyo International Post Office in Japan. In this study, we aimed to diagnose the disease and identify the causal organisms. Preliminary results have been reported elsewhere (Goto *et al*., 2016).

Symptoms

Dark-brown irregular shaped spots with water-soaked margins were observed at the tip or margin to center of the leaves (Fig. 1-A), where sporulation of sporangia was observed on the undersurface of some leaves under stereo microscope (Fig. 1-B and 1-C). The symptoms with no sporangia-like sign also tested positive by ImmunoStrip® for *Phytophthora* (Agdia Ltd., U.S.A.).

Isolation of the causal fungus

Lesions on the leaves were cut into small pieces of about 5×5 mm, which were surface-sterilized for 10–20 sec with 70% ethanol, and then washed in sterilized distilled water. After removing excess moisture, the pieces were incubated on synthetic low nutrient agar (SNA) (Nirenberg, 1976) at 25℃ in the dark for 10 days. A single sporangium was isolated from the colony and transferred to V8 juice agar (V8A). Two isolates (To15, To18) were used for morphological observation, pathogenicity tests, and molecular phylogenetic analyses as well as mating tests. *P. ramorum* CBS101553 (A1 mating type) = ex type, ATCCMYA3239 (A2 mating type) and *P. cryptogea* IFO31622 (A2 mating type) were used for respective experiments. This study was performed at licensed quarantine laboratories and in closed chambers.

Cultural characteristics

Cultural characteristics of the isolates were examined on carrot piece agar (CPA) (Werres *et al*., 2001) in the dark at 5℃, 10℃, 15℃, 20℃, 25℃ and 30℃ for 10 days. The aerial mycelia were sparse or absent in the isolates (Fig. 1-D), and grew at between 5℃ and 25℃. The optimum temperature for mycelial growth was 20℃ (3.0–3.2 mm/day), whereas there was no growth at 30℃. Similar results were shown in *P. ramorum* CBS101553 and ATCCMYA3239 (Fig. 2).

Pathogenicity test

Three plant species, *Rhododendron* sp. 'Purple dome', *Pieris japonica* (Ericaceae) and *Camellia* sp. (Theaceae), were used for the pathogenicity test. Inoculation was conducted by placing V8A pieces (8 mm in diam.) including hyphae on bundled needle-wounded leaves and non-wounded healthy ones of potted plants, respectively. The aseptic V8A pieces were used as negative controls. Each inoculated leaf including V8A pieces was wrapped with Parafilm® (Bemis Company, Inc., U.S.A.) and the whole

[1)] Tokyo substation, Yokohama Plant Protection Station,
[2)] Yokohama Plant Protection Station

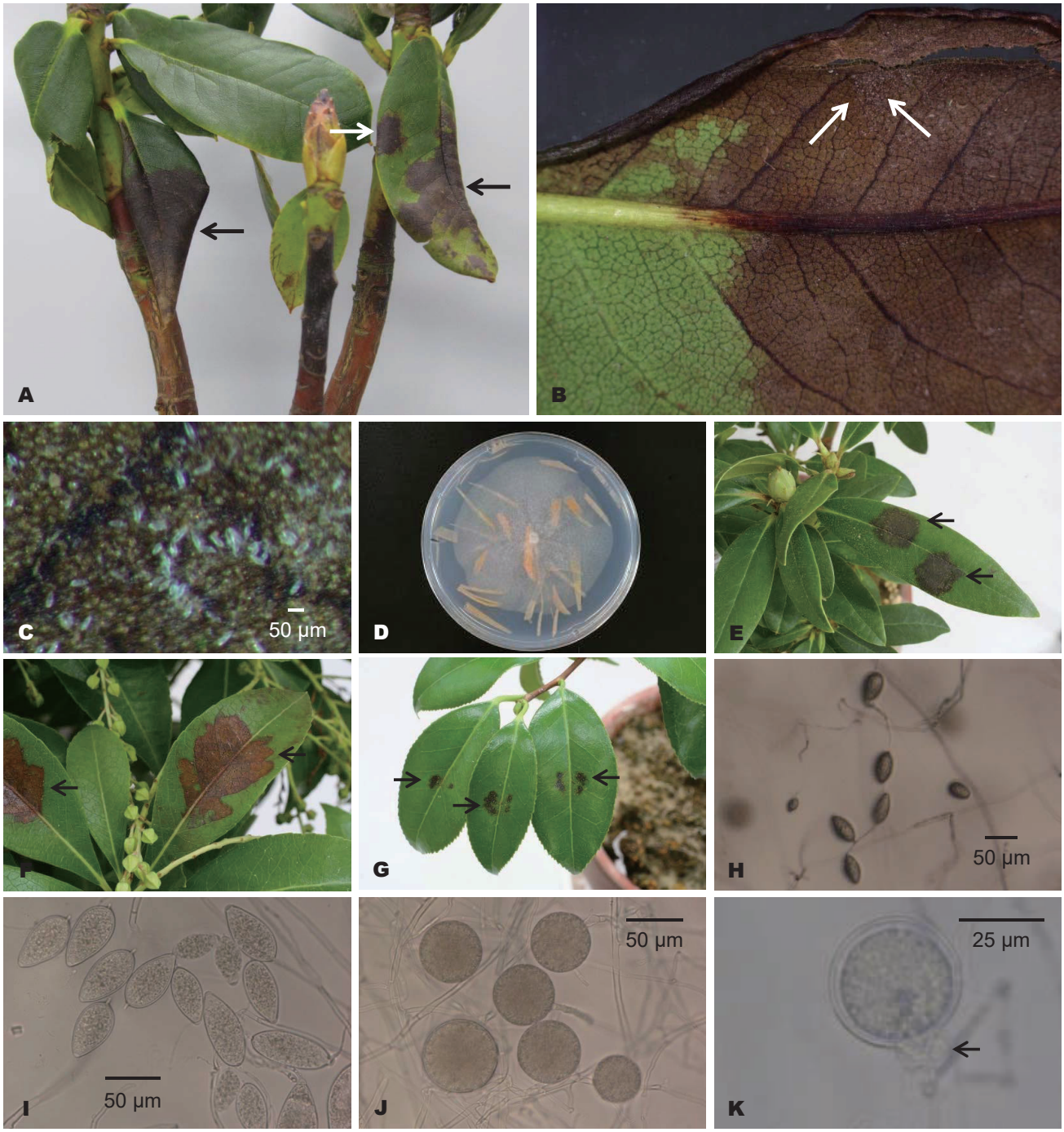

Fig. 1 Symptoms on *Rhododendron* sp. intercepted in Feb. 2015 and pathogenicity and morphology of isolate To15.
A: Natural symptoms (arrow), B: Undersurface of diseased leaf (Fig. 1-A, left) and produced sporangia (arrow), C: Close-up of sporangia of Fig. 1-B, D: Colony of the isolate To15 on CPA at 20℃ in the dark for 10 days, E, F, G: Symptoms on the leaf of *Rhododendron* sp. (E), *Pieris japonica* (F) and *Camellia* sp. (G) 3 to 5 days after inoculation with isolate To15, respectively, H-K: Morphology of isolate To15 and sexual structure by isolate To15 × *P. cryptogea* IFO31622 on CPA [H: sporangia arranged sympodially, I: sporangia, J: chlamydospores, K: amphigynous antheridium (arrow), oogonium, and plerotic oospore].

plants were incubated under moist conditions in a growth chamber at 20℃/15℃ with 12 h fluorescent light/dark for 3–5 days. As a result, dark brown spots appeared on wounded leaves of each plant (Fig. 1-E, 1-F and 1-G), but not on non-wounded ones (Table 1). The inoculated isolates were readily re-isolated from the lesions, thereby completing Koch's postulates. The isolates were strongly pathogenic to both *Rhododendron* sp. 'Purple dome' and *P. japonica*, but weakly to *Camellia* sp. Similar results were shown in *P. ramorum* CBS101553 and ATCCMYA3239, whereas no symptoms were observed on negative controls (Table 1).

Morphology

For morphological observation, the isolates as well as *P.*

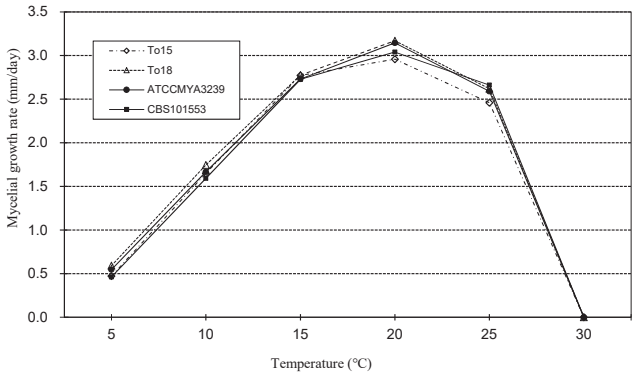

Fig. 2 Mycelial growth rate of four isolates at six different temperatures (°C) on CPA in the dark for one day.

ramorum CBS101553 and ATCCMYA3239 as controls were incubated on CPA under darkness at 20℃ for 20 days, and the resulting anamorph was observed under light microscope. In the isolates, sporangia were sympodial, hyaline, ellipsoid or elongated-ovoid and caducous with a short pedicel (<5 μm), and semi-papillate; the total size of the isolates was 30–85 × 18–36 (av. 54–56 × 27–28)μm, length/width ratio 1.7–2.5 (av. 1.9–2.0) (Fig. 1-H and 1-I). In addition, sporangia germinated directly or released motile zoospores upon flooding with pond water. The isolates also produced numerous chlamydospores intercalarily and terminally, which were globose, hyaline to slightly pigmented; the total size was 26–78 (av. 52–56) μm in diameter (Fig. 1-J). The dimensions of anamorph produced by each isolate were compared with two controls and the original description (Werres *et al*., 2001) shown in Table 2.

Mating tests

As no sexual structures were observed in single cultures, the isolates were paired with the tester isolates of *P. ramorum* CBS101553 (A1), ATCCMYA3239 (A2) and *P. cryptogea* IFO31622 (A2) on CPA at 10℃ for 5 days followed by at 20℃ for 10 days in the dark. As a result, sexual structures were only induced by *P. cryptogea* IFO31622 (A2) (Fig. 1-K), which proved the isolates to be heterothallic and mating type A1. Oogonia were terminal, smooth and spherical; the total size was 33–45 (av. 37–38) μm in diam. Oospores were plerotic and 28–41 (av. 34–35) μm in diam. Antheridia were amphigynous and barrel-shaped, 9–18 × 10–18 (av. 13 × 15) μm. The dimension of each sexual structure was compared with that of CBS101553 × *P. cryptogea* IFO31622 and the original description (Werres *et al*., 2001) in Table 3.

Phylogenetic analysis

The sequence of the internal transcribed spacer of ribosomal

Table 1 Pathogenicity of isolate To15 causing leaf blight of *Rhododendron* sp. to three plant species

Plant species	Isolate (To15)		Control[*1]	
	Wounded	Non-wounded	Wounded	Non-wounded
Rhododendron sp.	6/6[*2]	0/6	0/6	0/6
Pieris japonica	10/11	0/11	0/6	0/4
Camellia sp.	7/8	0/8	0/5	0/5

[*1] The aseptic V8A pieces were used as negative controls.
[*2] Number of diseased leaves / total number of inoculated ones.

Table 2 Comparison of dimensions of anamorph produced by isolates causing leaf blight of *Rhododendron* sp. with those of *Phytophthora ramorum*

	Sporangia (n=40)		Chlamydospores (n=40)
	length × width (μm)	L/B ratio	width (μm)
Isolates No.			
To15[*1]	30.0-73.0 × 17.5-33.8 (av. 54.2 × 28.2)	1.7-2.3 (av. 1.9)	37.5-72.5 (av. 55.9)
To18[*1]	35.5-85.0 × 18.8-35.5 (av. 56.0 × 27.4)	1.7-2.5 (av. 2.0)	26.3-77.5 (av. 51.8)
Phytophthora ramorum			
ATCCMYA3239[*1]	35.0-67.5 × 17.5-33.8 (av. 54.0 × 27.3)	1.7-2.3 (av. 2.0)	18.0-72.5 (av. 42.3)
CBS101553[*1]	28.0-82.5 × 15.5-36.3 (av. 50.8 × 25.3)	1.7-2.8 (av. 2.0)	22.5-50.5 (av. 37.3)
Weress *et al.*[*2] (2001)	40-80.0 × 20.0-32.0 (av. 52.0 × 24.0)	1.8-2.4 (av. 2.2)	22.0-72.0 (av. 53.8)

[*1] Data in this study.
[*2] Data taken from Werres *et al.* (2001).

Table 3 Comparison of dimensions of sexual structures produced by pairing each isolate causing leaf blight of *Rhododendron* sp. and *P. ramorum* CBS101553 (A1) with *P. cryptogea* IFO31622 (A2)

Mating partner	Oogonia	Antheridia	Oospores
P. cryptogea IFO31622 (A2) ×			
To15[*1]	32.5-42.5 (av. 38.2)	8.8-17.5 × 10.0-18.0 (av. 13.3 × 14.7)	27.5-40.0 (av. 34.1)
To18[*1]	30.0-45.0 (av. 37.3)	10.0-17.5 × 12.5-17.5 (av. 13.7 × 15.1)	28.0-41.3 (av. 34.8)
CBS101553[*1]	33.0-45.0 (av. 38.9)	11.3-17.5 × 13.8-17.5 (av. 14.4 × 15.5)	30.0-42.0 (av. 35.8)
P. cryptogea BBA62660 (A2) ×			
CBS101553[*2]	28-38 (av. 31.2)	10-18 × 14-16	28-38

[*1] Data in this study. Dimensions: range and mean values (μm). n=19-24.
[*2] Data taken from Werres *et al.* (2001).

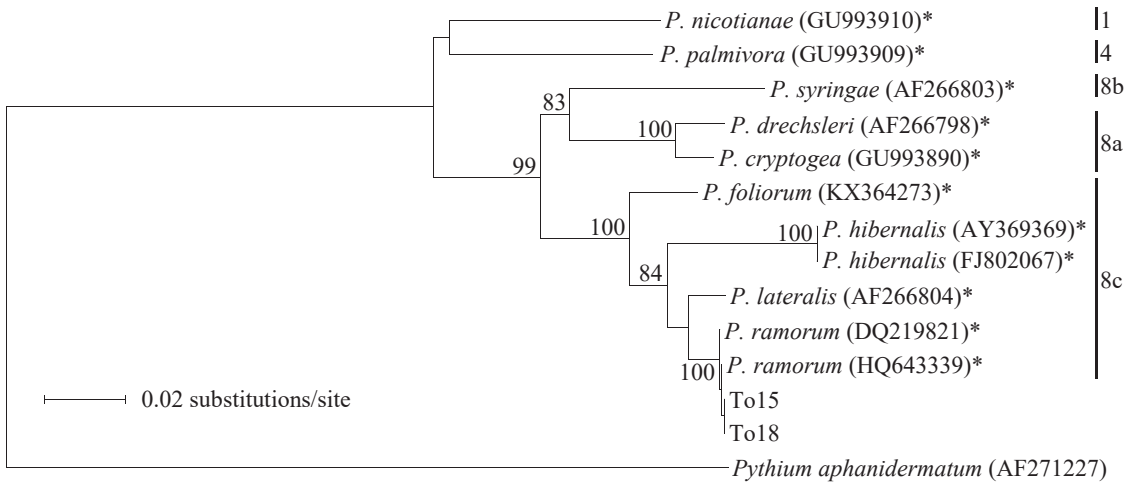

Fig. 3 A neighbor-joining phylogenetic tree of the 9 *Phytophthora* taxa, including two isolates from *Rhododendron* sp. based on the sequence of the ITS+5.8S rDNA sequences.
Numbers on the branches are bootstrap values in 1000 bootstrap replicates. The bootstrap values greater than 70 are shown. The accession numbers in the DNA Data Bank of Japan (DDBJ) are shown in parentheses. *Pyhium aphanidermatum* is an outgroup. *The species belonging to clade 1, 4 and 8a, 8b, 8c based on Blair *et al*. (2008).

DNA (rDNA-ITS) including 5.8S, ITS1, and ITS2 regions was analyzed to confirm the species identification. These regions were amplified with the primers ITS1/4 (White *et al*., 1990), and directly sequenced. The sequences were aligned using ClustalX v2.0.7 (Larkin *et al*., 2007). Phylogenies were generated using distance methods. The distance matrix for the aligned sequences was calculated using Kimura's two-parameter method (Kimura, M., 1980) and was analyzed with the neighbor-joining method (Saitou & Nei, 1987) using ClustalX v2.0.7 (Larkin *et al.,* 2007). The isolates tested had 99.8% (796/797bp) similarity with *P. ramorum* CBS101553 (DDBJ accession No. HQ643339) and ATCC MYA3679 (DDBJ accession No. DQ219821), respectively. Blair *et al*. (2008) reported that the genus *Phytophthora* phylogenetically could be divided into 10 clades based on seven of the most informative loci, and *P. ramorum* belonged to clade 8c. In our study, the neighbor-joining tree based on the sequence of rDNA-ITS showed that the isolates fell into a monophyletic group with *P. ramorum* (100% bootstrap value) and were clearly separated from allied species (e.g. *P. lateralis*, *P. hibernalis*) other than *P. ramorum* within the same clade (Fig. 3). The sequences of isolate To15 was registered in DNA Data Bank of Japan (DDBJ) as LC193524.

Identification

Based on the morphology of sporangia and zoospores, all isolates were considered to belong to the genus *Phytophthora*. The isolates were compared with the given descriptions of species (ca. 30) of *Phytophthora* reported for *Rhododendron* (Farr and Rossman, 2016), and similar to the morphology or molecular phylogeny of *P. ramorum, P. lateralis* and *P. hibernalis*. The morphological and cultural characteristics of isolates were very close to those of *P. ramorum* CBS101553, ATCCMYA3239 tested

in our study and the original description of *P. ramorum* (Werres *et al*., 2001), i.e. slow-growth, numerous and large chlamydospores, as well as semi-papillate, deciduous and sympodial sporangia with a short pedicel. Furthermore, the isolates could be distinguished from *P. lateralis* and *P. hibernalis* based on the morphology of sporangia, which were non-papillate in *P. lateralis* (Erwin & Ribeiro, 1996; Braiser *et al*., 2010), and long pedicel (23–73 μm) in *P. hibernalis* (Erwin & Ribeiro, 1996). The isolates were pathogenic to *Rhododendron* sp. (original host), *Pieris japonica* and *Camellia* sp., which have been reported as host plants of *P. ramorum* in the UK and France (Inman *et al*., 2003; Husson *et al*., 2007; Beales *et al*., 2004). The mating types were determined as A1, commonly found in the UK, due to the formation of sexual structures when crossed with known A2 mating type of *P. cryptogea*. The formation did not occur when crossed with *P. ramorum* ATCCMYA3239 (A2), which was also reported by Werres *et al*. (2001), Werres and Kaminskii (2005) and Bultajić *et al*. (2010). Moreover, the sequence of isolates was closely related to that of *P. ramorum* (HQ643339 and DQ219821) with 99.8% identity and distant from other species. In conclusion, the isolates (To15, To18) were identified as *Phytophthora ramorum* Werres De Cock & Man in't Veld.

In 2011, Japan regarded *P. ramorum* as an important quarantine pathogen, and required exporting countries to carry out 'growing site inspection' for this pathogen, a newly phytosanitary measure (World Trade Organization, 2011). However, an imported Rhododendron plant was found to be infected with this pathogen by import inspection in Japan. Though it is not clear how and why the pathogen was not detected in inspections in the exporting country (UK), the detection at entry suggests that careful import inspections are needed even if a phytosanitary certificate is attached to imported plants.

Name of the disease

P. ramorum is a severe pathogen on hardy ornamentals and various trees in North America and Europe (Werres and Kaminskii, 2005). This is the first report of *P. ramorum* causing leaf blight of *Rhododendron* sp. in Japan. We propose to name this new disease 'ramorum blight' of Rhododendrons (Japanese name: eki-byo). On Rhododendron, symptoms of 'ramorum blight' may appear anywhere on leaf surfaces and are indistinguishable from those caused by other leaf-infecting species of *Phytophthora* (Parke and Lucas, 2008). Similar symptoms with 'ramorum blight' caused by *P. hibernalis* (Blomquist, *et al*., 2005) and *P. foliorum* (Schlenzig, *et al*., 2016) were also reported. Therefore, it is necessary to isolate the causal fungus to distinguish 'ramorum blight' from similar diseases.

Acknowledgements

We would like to thank Dr. Koji Kageyama, River Basin Research Center, Gifu University for valuable advice on preparing this manuscript.

References

Beales, P.A., T. Brokenshire, A.V. Barnes, V.C. Barton and K.J.D. Hughes (2004) First report of ramorum leaf blight and dieback (*Phytophthora ramorum*) on *Camellia* spp. in the UK. Plant pathology 53: 524.

Blair, J.E., M.D. Coffey, S. Park, D.M. Geiser and S. Kang (2008) A multi-locus phylogeny for *Phytophthora* utilizing markers derived from complete genome sequences. Fungal Genetics and Biology 45: 266-277.

Blomquist, C., T. Iring, N. Oterbauer and P. Reeser (2005) *Phytophthora hibernalis*: A new pathogen on *Rhododendron* and evidence of cross amplification with two PCR detection assays for *Phytophthora ramorum*. Plant Health Progress. (online), available from <https://www.plantmanagementnetwork.org/php/2005.asp>, (accessed 2015-08-25)

Brasier, C.M., A.M. Vettraino, T.T. Chang and A. Vannini (2010) *Phytophthora lateralis* discovered in an old growth Chamaecyparis forest in Taiwan. Plant Pathology 59:595-603.

Bultajić, A. and I. Djekić (2010) *Phytophthora ramorum* occurrence in ornamentals in Serbia. Plant. Dis. 94: 703-708.

Erwin, D.C. and O.K. Ribeiro (1996) *Phytophthora* Diseases Worldwide. APS Press. Minnesota. pp562.

Farr, D., H.B. Esteban and M.E. Palm (1996) Fungi on *Rhododendrn*: A worldwide Reference Parkway publisherd, Inc. Boone, North Carolina, USA. pp192.

Farr, D.F. and A.Y. Rossman (2016) Fungal Databases, Systematic Mycology and Microbiology Laboratory, ARS, USDA. (online), available from 〈http://nt.ars-grin.gov/fungaldatabases/〉, (accessed 2016-08-13)

Goto, H., T. Kanno, T. Hiyama, T. Hirakawa, Y. Nakanishi, T. Hirata and T. Sakoda (2016) Ramorum blight of *Rhododendron* sp. caused by *Phytophthora ramorum* intercepted in plant quarantine inspection in Japan. Jpn. J. Phytopathol. 82: 27 (abstr. in Japanese).

Husson, C., C. Delatour, P. Frey and B. Marçais (2007) First Report of *Phytophthora ramorum* on ornamental plants in France. Plant Dis. 91(10): 1359 (Abstract).

Inman, A.J., V.C. Townend, A.V. Barnes, C.R. Lane, K.J.D. Hughes, R.L. Griffin and S.J. Eales (2003) First report of ramorum dieback (*Phytophthora ramorum*) on *Pieris* in England. Plant Pathology 52: 785.

Kimura, M. (1980) A simple method for estimating evolutionary

rates of base substitutions through comparative studies of nucleotide sequences. J. Mol. Evol. 16: 111-120.

Larkin, M.A., G. Blackshields, M.P. Brown, R. Chenna, P. McGettigan, H. McWilliam, F. Valentin, I.M. Wallace, A. Wilm, R. Lopez, J.D. Thompson, T.J. Gibson and D.G. Higgins (2007) Clustal W and Clustal X version 2.0. Bioinformatics 23: 2947–2948.

Nirenberg, H.I. (1976) Untersuchungen über die morphologische und biologische Differenzierung in der *Fusarium* Sektion Liseola. Mitt. Biol. Bundesanst. Land-Forstwirtsch. Berl.-Dahlem 169: 1-117.

Parke, J.L. and S. Lucas (2008) Sudden oak death and ramorum blight. APS. (online), available from 〈http://www.apsnet.org/edcenter/intropp/lessons/fungi/oomycetes/pages/suddenoakdeath.aspx〉, (accessed 2016-04-13)

Roane, M.K. (2014) Introduction. In *Compendium of rhododendron and azalea diseases and pests second edition* (Linderman, R.G. and D.M. Benson ed.). APS Press. St. Paul, Minnesota, U.S.A.:1

Saitou, N. and M. Nei (1987) The neighbor-joining method: A new method for reconstructing phylogenetic trees. Mol. Biol. Evol. 4: 406–425.

Schlenzig, A., E. Purser and A. Pereaz-Sierra (2016) First finding of *Phytophthora foliorum* in the United Kingdom. New Disease Reports 34: 2.

Werres, S., R. Marwitz, W.A. Man In't Veld, De Cock., P.J.M. Bonants, M.D.E. Weerdt, K. Themann, E. Ilieva and R.P. Baayen (2001) *Phytophthora ramorum* sp. nov., a new pathogen on *Rhododendron* and *Viburnum*. Mycol. Res. 105: 1155-1165.

Werres, S. and K. Kaminskii (2005) Characterization of European and American *Phytophthora ramorum* isolates due to their morphology and mating behavior in vitro with other heterothallic *Phytophthora* species. Mycol. Res. 109: 860-871.

White, T.J., T. Burns, S. Lee, J. Taylor (1990) Amplification and direct sequencing of fungal ribosomal RNA genes for phylogenetics. In PCR Protocols - A Guide to Methods and Applications (Innis, M.A., D.H. Gelfand, J.J. Sninsky, T.J. White ed.). Academic Press. London, UK: 315–322.

World Trade Organization (2011) Committee on Sanitary and Phytosanitary Measures. G/SPS/N/JPN/266/Add.1 4 May 2011.

和文摘要

輸入検疫で発見されたシャクナゲ類疫病（新称）

迫田琢也・後藤浩子・菅野智成[1)]・日山東子[2)]・平川崇史[2)]・中西義成[2)]・平田隆司[2)]

横浜植物防疫所調査研究部

2015 年 2 月、英国から国際郵便で輸入されたセイヨウシャクナゲの検査で、葉が暗褐変し、葉裏に菌叢のある苗を発見した。被害部位より *Phytophthora* 属菌が高率に分離され、培養寒天の貼り付けによる有傷接種で原病徴を再現し、再分離された。また、アセビやツバキに病原性を示した。分離菌はCarrot piece agar で厚壁胞子を豊富に生じ、遊走子のう柄は仮軸状、遊走子のうは楕円形～紡錘形で L/B 比は 1.7–2.5（av. 1.9–2.0）、脱落性で柄は短く、乳頭突起は不明瞭。*P. cryptogea* A2 株との交配により有性器官を生じ、造卵器は球形で造精器は底着性、卵胞子は充満性。大きさは、遊走子のう 30–85 × 18–36（av. 54–56 × 27–28）μm、厚壁胞子 26–78（av. 52–56）μm、造卵器 33–45（av. 37–38）μm、造精器 9–18 × 10–18（av. 13 × 15）μm、卵胞子 28–41（av. 34–35）μm。生育適温は 20℃（菌糸生長 3.0–3.2mm/ 日）、30℃では生育しない。以上の特徴及び rDNA-ITS 遺伝子領域の塩基配列の相同性から Werres *et al*.（2001）に基づき、本菌を *Phytophthora ramorum* Werres De Cock & Man in't Veld. と同定した。本病は我が国未報告のため、病名に疫病（Ramorum blight）を提案する。

[1)] 横浜植物防疫所東京支所

[2)] 横浜植物防疫所